Rescue Shores

Fast, lightweight shoring for trench rescue operations

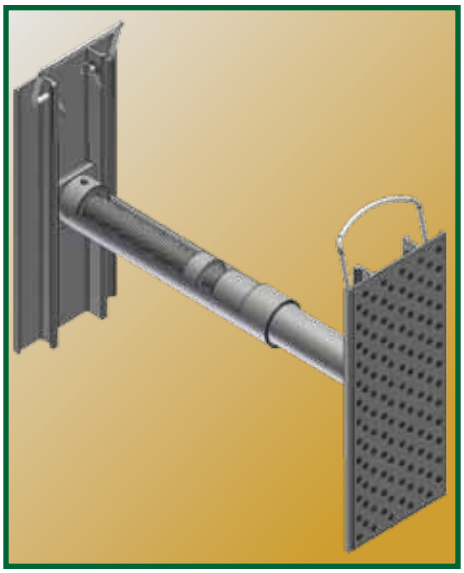

Rescue shore with Traction Tread Plate and new Positive Locking Cylinder

Positive Locking Cylinder

U-Style Swivel Socket Pad

Advantages:

Time is critical in a trench rescue and air jacks are time consuming to install safely. Air jacks are also heavy and need to be nailed to cumbersome planking or plywood inside of an already unsafe trench, putting the rescue crew at great risk of becoming trapped themselves.

Hydraulic Rescue Shores are quickly positioned and pressurized from the surface, eliminating the need for crew members to enter an unsafe trench to install shoring.

Rescue Shores feature a pivoting socket pad that swivel to support irregular trenches. Rails have traction tread plates that increase the holding grip on shoring board surface. Rescue Shores now come standard with positive locking cylinders that protects against the unlikely event of a collapsed cylinder due to loss of pressure.

Rescue Shores - Standard Rails

Model - Rail Lg. x Cr. Br..	Cross Brace Width (In.)	Cylinders	Weight (Lbs.)
S-1.5X1727-R	17 - 27	1	35
S-1.5X2236-R	22 - 36	1	38
S-1.5X2846-R	28 - 46	1	40
S-1.5X3455-R	34 - 55	1	43
S-1.5X4269-R	42 - 69	1	47
S-1.5X5288-R	52 - 88	1	51
S-3.5X1727-R	17 - 27	2	74
S-3.5X2236-R	22 - 36	2	83
S-3.5X2846-R	28 - 46	2	88
S-3.5X3455-R	34 - 55	2	93
S-3.5X4269-R	42 - 69	2	101
S-3.5X5288-R	52 - 88	2	110
S-5X1727-R	17 - 27	3	93
S-5X2236-R	22 - 36	3	98
S-5X2846-R	28 - 46	3	103
S-5X3455-R	34 - 55	3	108
S-5X4269-R	42 - 69	3	116
S-5X5288-R	52 - 88	3	125